SHOOK MODEL A-11 ENG

OPERATION AND MAINTENANCE DATA MANUAL

JOB #773

FOR
KABC TV
Los Angeles, California

ELECTRONIC NEWS GATHERING VEHICLE

9-12-2000

TABLE OF CONTENTS

GENERAL WARNINGS **1**
POWER SYSTEMS **2**
AC Power Systems 2
Powering from City Power 2
Generator Operations 3
Inverter Operations 4
DC Power Systems 4
Power Flow Drawing 6
ALARM SYSTEM **7**
System features: 7
Alarm Usage 7
Alarm Schematic Diagram 8
AIR CONDITIONING SYSTEM **9**
Controls 9
Cooling Operation 9
Fan Operation 9
Heating Operation 9
Filter Maintenance 9
Air Conditioning System - Cooling System Diagram 11
HYDRAULIC MAST / PAN & TILT OPERATIONS **12**
Mast and Pan Tilt Head Operations 12
MAST SAFETY SYSTEM **14**
Mast Safety System Schematic 15
APPENDIX A – Truck Drawings
TRUCK DRAWING
RACK DRAWING
I/O PANEL DRAWING
APPENDIX B - System Video
VIDEO PATCH PANEL DIAGRAMS
VIDEO FLOW DRAWING
VIDEO WIRE LIST
APPENDIX C - System Audio
BASIC AUDIO HOOK UP AND GROUNDING PROCEDURES
AUDIO CONNECTOR WIRING PINS
AUDIO PATCH PANEL DIAGRAMS
AUDIO FLOW DRAWINGS
AUDIO WIRE LIST
APPENDIX D – Audio Proof
APPENDIX E - Serial Number List
APPENDIX F - Pre Delivery Check List
SHOOK DOMESTIC WARRANTY

GENERAL WARNINGS

1. Read all safety and operating instructions, including this manual, and follow these instructions while operating the equipment. All of the instructions and manuals should be stored in a convenient place for future reference.
2. Height Restrictions:

   Top of Stowed mast = 11 Feet 9 inches / 3.58 Meters

   Recommend Minimum Clearance = 12 Feet 3 Inches / 3.73 Meters
3. All AC powered equipment comes with a 3-wire plug with an integral grounding pin. This plug fits into the standard, grounded power outlets in the vehicle. Do not defeat the safety purpose of the grounded plugs. This is a dangerous shock hazard and can seriously harm or even kill personnel.
4. The power up routine must be followed to protect both the vehicle and the operators. Improper vehicle powering could cause extensive damage. See the "POWER SYSTEMS" section for powering the vehicle correctly.
5. Do not start the on board generator while it is connected to a load! Make sure that the change over switch, located at the lower left-hand side of rack #1, is NOT in the generator position before starting generator. Do not place a load on the generator until it has warmed up for at least five minutes.
6. Inspect each site setup and make sure that the generator exhaust system outlet is clear of walls, snow banks, or any other obstruction that could prevent exhaust gases from dissipating. Also, make sure the vehicle is not parked in high grass or brush which could catch fire.
7. Change the generator engine oil and filter after the first 5 hours of operation and every 50 hours (or 6 months which ever is less) there after.
8. The compressor on the air conditioner may be damaged if the unit is turned off and then back on again without allowing enough time for the head pressure to stabilize. Operators should wait at least five minutes before attempting to turn the air conditioner back on.

   NOTE: The air conditioner has been modified with a "Hot Gas Bypass". Any service person attempting to work on this unit must be notified of this modification.
9. The air conditioner should be operating any time the vehicle and the electronic equipment within it are powered, even if air conditioning or heating is not desired. The goal is to keep airflow around the electronic equipment at all times.
10. Do not move the vehicle while the mast is extended. This can cause damage to the mast and the vehicle. Shook has installed a fuel pump disable system that will not let the vehicle engine run with out fully stowing the mast. More information on this system can be found in the Mast Safety System section.
11. Because of the Mast Safety System mentioned above. It is possible for the mast to jar loose and activate the fuel pump disable system. This can be disconcerting especially when vehicle systems shut down (including power steering and brakes). If this happens, stop on the side of the road (you can still steer and brake with some effort). Extend the mast a little then retract all the way. This should allow you to start the vehicle again. For more information, see the Mast Safety System section.

POWER SYSTEMS

The Shook Model A-11 ENG Vehicle is equipped with a complete power system which includes both AC and DC power. This power system can be fed by either an external "city" power source or by the onboard power generator.

AC Power Systems

The Shook Model A-11 ENG Vehicle is equipped with an AC power system that operates equipment at 110 VAC at 60Hz. The source of the power comes from either the on board generator or tying the vehicle to a city (exterior) power supply.

The power has been split into two systems. System-2 powers the heavy consuming devices. These include the air conditioner. System-1 is used to power all of the racks and AC outlets.

The AC power is distributed at the distribution panel as follows:

System-1	System-2
Rack-1	DC Converter/Charger
Rack-2	Air Conditioner
Rack-3	110 VAC Outlet - Exterior
Editor & Speakers	110 VAC Outlet - Deck
Mast Compressor	
110 VAC Outlet - Interior	

Powering from City Power

City power input required is 110 vac to 230 vac. 30 amps is required at 230 vac while a higher current input is required at lower voltages.

1. Power is connected to the vehicle through the main power input connector on the lower rear curbside of the vehicle. Inside the power cable which is to be connected to the vehicle power source are three wires which should be connected as follows:

   Conductor 1 - Black
   Conductor 2 - White
   Ground - Green

   NOTE: It is not necessary to hook up the (green) ground wire unless required to do so by local codes. If the (green) ground wire is connected, even though the isolation transformer is still in the circuit, its usefulness as isolation for the audio and video signals from ground induced noise and hum is effectively bypassed. In fact, it is possible that ground loops could easily be introduced into the system.

3. Be sure the "city/off/generator" switch located to the left of rack #1, is placed in the "off" (middle) position before connection of primary power to the vehicle.
4. Check the primary power with a portable voltmeter at its source BEFORE connecting the power cable to the input power connector of the vehicle. Input power of greater than 240 vac can damage the equipment in the vehicle, so measure input power before connecting to vehicle.
5. Set the power "tap" switch located the left of rack #1, to the setting that matches the input voltage being applied to the vehicle. Input source voltages of 110 vac, 208 vac, 220 vac, and 230 vac are accepted. Shook recommends that the vehicle should be powered by a 208 vac to 230 vac for optimum efficiency.

   WARNING: If the input tap switch is in the 110 vac position and voltages higher than 150 vac are applied to the system, isolation transformer damage is possible and even likely at the higher voltages. Down stream equipment damage is also very likely.

6. Connect the input power cable to the vehicle.
7. Only after all the above steps have been completed, turn the "city/off/generator" switch to the "city"

position. Check the digital voltmeter mounted above Rack #1 and read the voltage. Verify that it is reading close to 120 vac.

NOTE: This voltmeter is reading the output of the isolation transformer or the generator, which is on line, and not the input power to the vehicle.

8. Turn the air conditioner AC power circuit breaker on. Switch the air conditioner on and allow the air conditioner to stabilize a few minutes after you hear the compressor kick in.
9. Turn on the remaining circuit breakers and allow the television equipment to power up and stabilize. It is recommended that the equipment be turned off when powering the vehicle up.
10. Place all the technical (TV) equipment into the mode in which you wish it to warm up for operation.

Generator Operations

The Shook Model A-11 ENG Vehicle is equipped with an ONAN gasoline electric generating system with a remote control panel. This unit has an operating power of 6.5 kilowatts. Fuel for this unit is supplied from the vehicle fuel supply.

Before Starting

1. Inspect the setup and make sure that the exhaust system outlets are clear of walls, snow banks, or any other obstruction that would prevent the exhaust gases from dissipating properly. Also, while running the generator, make sure not to park the vehicle in high grass or brush that could catch on fire.
2. Do not start the generator while it is connected to a load. Place the "city/off/generator" switch, located to the left of rack #1, in the "off" position. Turn off all AC power circuit breakers.
3. Check the engine oil levels often. Keep the level near the fill level indicator "full" mark. DO NOT OVERFILL. Change the generator engine oil and filter after the first 5 hours of operation and every 50 hours (or 6 months which ever is less) there after.
4. Make certain that the vehicle's fuel tank is full of clean, fresh unleaded gasoline fuel.

NOTE: The generator fuel line will not empty the vehicles fuel tank. It has been designed to quit feeding fuel to generator when it has reached about 1/4th of the tank.

Starting the Generator

1. Place the "city/off/generator" switch to the "off" position. Do not start the generator while it is connected to a load.
2. Start the generator by pushing the "start-stop" switch on the remote control above rack #1 to "start" position.
3. Release the button when the generator starts.
4. Let the unit warm up at least 5 minutes before switching in the load. During warm up, make sure that the choke has released and that the generator is running smoothly.
5. Switch the load into the circuit by placing the "city/off /generator" switch into the "generator" position.
6. Turn the air conditioner AC power circuit breaker on. Switch the air conditioner on and allow the air conditioner to stabilize a few minutes after you hear the compressor kick in.
7. Turn on the remaining circuit breakers and allow the television equipment to power up and stabilize. It is recommended that the equipment be turned off when powering the vehicle up.
8. Place all the technical (TV) equipment into the mode in which you wish it to warm up for operation.

NOTE: There is a circuit breaker on the generator. This breaker should be on at all times, but can be tripped by a surge or short in the system. If for some reason the generator is operating, but no power is on line, check this circuit breaker. Switching it off and on should put the generator back in the system. If it trips again check the system for faults.

Stopping the Generator

1. To stop the generator, remove the load by turning off all the breakers in the breaker panel.
2. Place the "city/off/generator" switch into the "off" position.
3. Let the unit run with no load from three to five minutes to cool down before stopping the generator engine.
4. Push the "start-stop" switch to the "stop" position to kill the generator.

NOTE: Regular engine maintenance including oil and filter changes and checking the coolant level is important for proper operation of the power generator, see the owner's manual for complete instructions.

Inverter Operations

The Shook Model A-11 has the advantage of having the technical leg being powered by a backup power supply if the normal power sources fail. This backup power supply source is from the DC power system from the inverter that is powered from the auxiliary battery. This battery does not have the current carrying capability to continuously power the inverter for any duration, but it can be charged from the vehicle alternating system. Shook recommends that if the backup power system is being used, the vehicle engine should be running. This should keep the auxiliary battery from losing its charge.

The inverter is designed to operate if the main power supplies are not operational. It is activated by the inverter relay that examines the technical leg to see if it has power. If it does not, it powers the technical leg with the output of the inverter. The inverter is operational if the inverter power switch is on.

Because the inverter can cause noise in the AC power Shook recommends that the inverter power switch not be left on. This will also keep the inverter from being a drain on the battery. If the operator suspects the possibility of main power failure, the vehicle engine should be started and the inverter switched on. If main power failure occurs, the relay will switch to the backup power source automatically. This method is called "Hot Standby" operation.

The inverter is located in rack #2 and the relay is located in the bottom of the AC power panel. The inverter power switch is located in front of the vehicle by the driver seat. Further details on the inverter can be found in the owner's manual.

DC Power Systems

The AC to DC converter/charger is located midway on the drivers' sidewall in rack #3 and the DC circuit breaker panel box is located in the top part of rack #1. There is one Master circuit breaker that feeds the following circuits:

1 - Exterior Lights
2 – Interior Lights
3 - Microwave power
4 - Mast
5 - Pan/Tilt power

This vehicle has two maintenance free batteries one of which powers the vehicles systems. The second "auxiliary" battery supplies the equipment 12 volt circuits. The main battery is located under the engine hood. The auxiliary battery is in the generator compartment at the rear of the vehicle.

NOTE: If a battery is left dead for 2 weeks or more, sulfating begins. A battery should be kept at full charge (13.3 to 14.2 are acceptable rates in a temperate climate). If a battery is left on a charger at full charge for 2 to 3 months without being discharged to 12.4 or lower in normal use, it will sulfate. When a battery sulfates, internal resistance increases which increases heat and water consumption.

If your vehicle is not used on a regular basis, we recommend the following - every 2 to 3 months, turn off charger and allow battery to discharge to 12.4 volts or less by turning on

a DC load. Then, turn off load, reactivate the charger and recharge battery.

These simple maintenance procedures will lengthen battery life. A book on battery service can be obtained from the "Battery Council International"; 111 East Wacker Drive; Chicago, IL 60601.

Primary AC power to the AC to DC converter/charger must be on for the charger circuit to operate. (This AC power comes from a breaker in the power panel.) This unit will only charge the auxiliary battery. The vehicle alternator will charge both batteries.

Caution should be taken that all DC lighting is used for just a short time when the production vehicle is not in operation. If long periods of DC lighting are needed, the vehicle and the DC converter should be powered to operate the lighting!

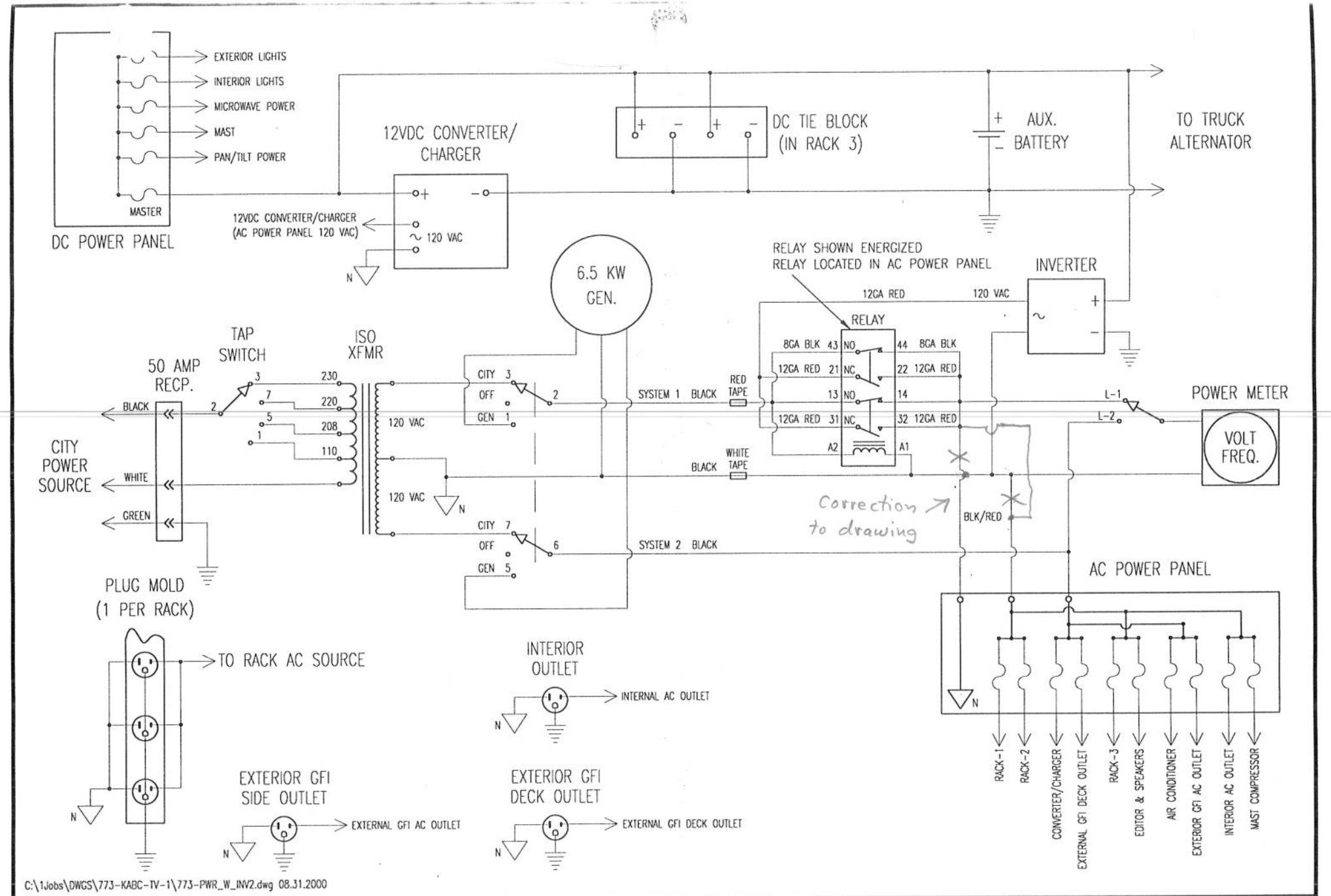

C:\1Jobs\DWGS\773-KABC-TV-1\773-PWR_W_INV2.dwg 08.31.2000

APPROVED BY:

DATE:

A

THIS DRAWING IS THE PROPERTY OF SHOOK ELECTRONICS USA AND UTILIZES PROPRIETARY DESIGNS. THIS DRAWING CANNOT BE REPRODUCED OR TRANSMITTED WITHOUT WRITTEN CONSENT FROM SHOOK ELECTRONICS USA.

SHOOK Electronics USA, Inc.
18975 Marbach Lane, Bldg 200 (210) 651-5700
San Antonio, Texas 78266 FAX: (210) 651-5220

SHEET TITLE: POWER DISTRIBUTION			SHEET NO. 1 OF 1
SCALE: NTS	DATE: 8.30.00	DRAWN BY: RJB	
JOB NUMBER: 773/774	REVISION DATE:	CHECKED BY:	
FOR: KABC LOS ANGELES, CA.		DRAWING NUMBER:	

ALARM SYSTEM

The Shook Model A-11 ENG Vehicle has been equipped with a K-9 alarm system.

System features:

1. All solid-state electronic control module
2. Loud police type siren
3. All doors and hood protected
4. Armored key lock and led light
5. 4 way emergency lights flash
6. Ignition cut out when system is armed
7. Electronic control module has 100% guarantee as long as you own the truck.

Alarm Usage

Normal alarm functions can be activated by the using the key ring transmitter. The transmitter has two buttons labeled I & II. The alarm system comes equipped with two such transmitters.

To Arm Alarm: Press button I once. Alarm will confirm with one chirp and a light flash. If three chirps and three light flashes, alarm is armed with open circuit (door or hood is open).

To Disarm Alarm: Press button I once while alarm is armed. Alarm will disarm with two chirps and two flashes as confirmation. Four chirps and four flashes confirm that alarm was activated while away.

Other functions and installation procedures of the K-9 alarm are noted in the alarm manual. Installation details are shown in the schematic of the alarm connections at the end of this section.

For additional information this alarm system has been installed by Ming of San Antonio. Details on the alarm and installation can be requested from them at:

Ming of San Antonio
Auto Beauty Center
5790 NW Loop 410
San Antonio, Texas 78238
(210) 681-4830

SW #	DIP SWITCH OPERATION
1	3 OR 45 SEC EXIT DELAY
2	CURRENT SENSING (ON/OFF)
3	CHIRP ARM/DISARM CONFIRM (ON/OFF)
4	AUTO LAST DOOR ARMING (ON/OFF)
5	LAST DOOR ARM LOCK DOORS (ON/OFF)
6	DOOR LOCK PULSE TIME (0.7/3.5 SEC)
7	LOCK & UNLOCK DOORS FROM IGNITION
8	DISARM WITH TRUNK RELEASE
9&10	TRANSMITTER BUTTON OPERATION

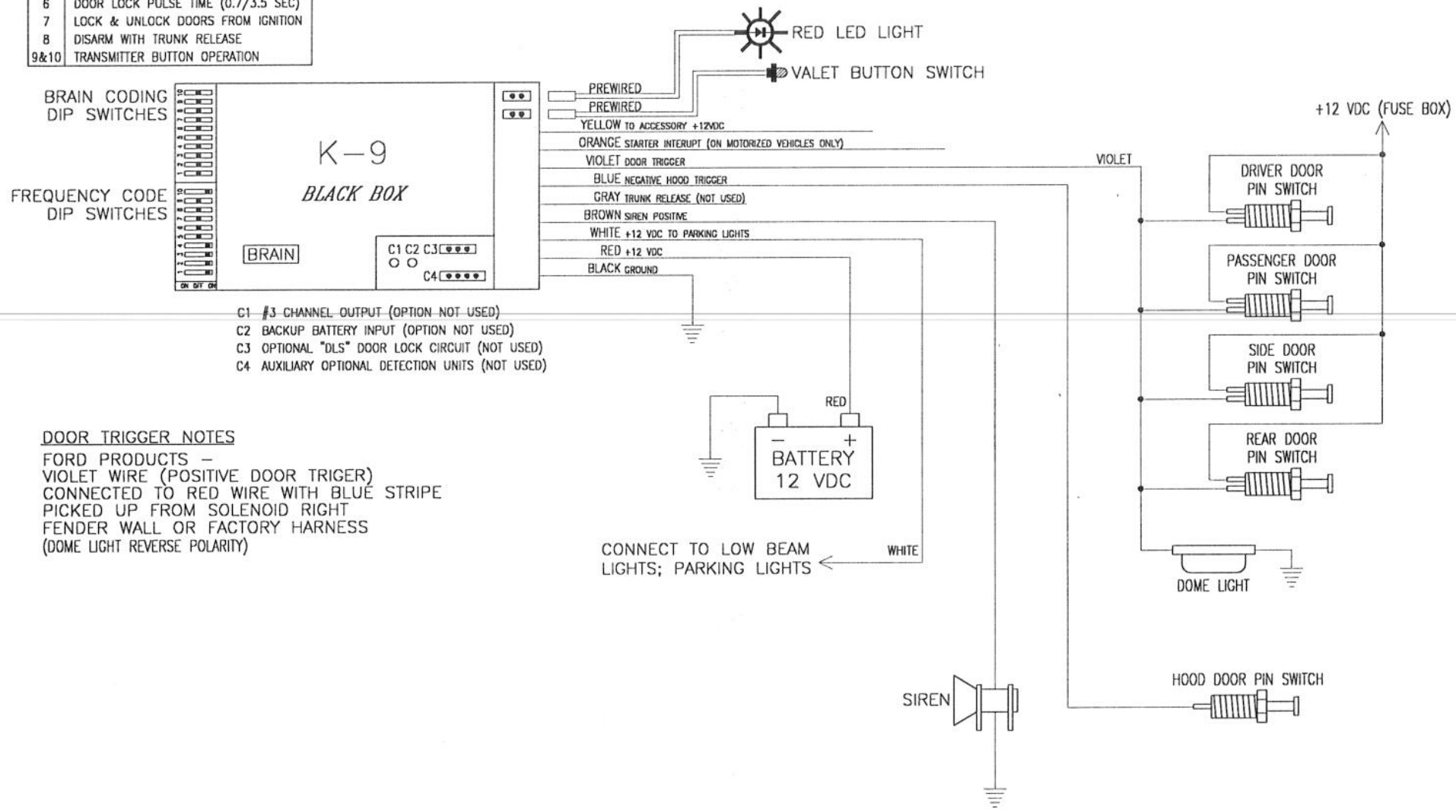

C1 #3 CHANNEL OUTPUT (OPTION NOT USED)
C2 BACKUP BATTERY INPUT (OPTION NOT USED)
C3 OPTIONAL "DLS" DOOR LOCK CIRCUIT (NOT USED)
C4 AUXILIARY OPTIONAL DETECTION UNITS (NOT USED)

DOOR TRIGGER NOTES

FORD PRODUCTS –
VIOLET WIRE (POSITIVE DOOR TRIGER)
CONNECTED TO RED WIRE WITH BLUE STRIPE
PICKED UP FROM SOLENOID RIGHT
FENDER WALL OR FACTORY HARNESS
(DOME LIGHT REVERSE POLARITY)

APPROVED BY:

DATE:

A

THIS DRAWING IS THE PROPERTY OF SHOOK ELECTRONICS USA AND UTILIZES PROPRIETARY DESIGNS. THIS DRAWING CANNOT BE REPRODUCED OR TRANSMITTED WITHOUT WRITTEN CONSENT FROM SHOOK ELECTRONICS USA.

SHOOK Electronics USA, Inc.
18975 Marbach Lane, Bldg 200 (210) 651-5700
San Antonio, Texas 78266 FAX: (210) 651-5220

SHEET TITLE: K-9 ALARM DIAGRAM			SHEET NO. 1 OF 1
SCALE: NTS	DATE: 7.24.00	DRAWN BY: RJB	
JOB NUMBER: 773	REVISION DATE:	CHECKED BY:	
FOR: KABC LOS ANGELES, CALIFORNIA		DRAWING NUMBER:	

AIR CONDITIONING SYSTEM

The Shook Model A-11 ENG Vehicle is equipped with a Duo-Therm Brisk Air air conditioning system. This unit has been modified for "Hot Gas Bypass". The unit has a cooling capacity of 13,500 BTU.

Controls

1. The selector switch has eight positions including "OFF". This controls fan speed, heating mode and cooling modes
2. The thermostat controls the temperature range from 65 degrees Fahrenheit to 90 degrees Fahrenheit.
3. Hot-Gas-Bypass has been installed on this unit. Cooling is controlled with a bypass valve, not by cycling the compressor as in a normal unit. Any service person attempting to do service on this unit needs to be informed that the unit has Hot-Gas-Bypass installed, and not to disable it.

Cooling Operation

1. Set the thermostat at the desired temperature level.
2. Select the fan operation that best satisfies your needs:

HIGH COOL: Selected when maximum cooling and dehumidification are required

MEDIUM COOL: Selected when normal or average cooling is required.

LOW COOL: Should <u>not be used in cool temperatures</u> this can cause the air conditioner to freeze up.

NOTE: After shutting the air conditioner down with either the selector switch or thermostat, wait at least 2 minutes before restarting. This allows the refrigerant pressure to equalize and the compressor to easily restart.

Fan Operation

This will circulate the air in the vehicle without cooling or heating. There are three positions to select from: HIGH FAN, MED FAN, or LOW FAN. The fan should be operating any time the vehicle and the electronic equipment within it are powered, even if air conditioning or heating is not desired. The goal is to keep airflow around the electronic equipment at all times.

Heating Operation

This air conditioner unit has had the optional heat kit installed. Heating instructions are explained below.

NOTE: This electric heater will not replace a furnace for heating your vehicle in cold weather. The intent is to remove the chill on cool days or mornings. We suggest that you use the heater as little as possible since the TV equipment must be kept <u>cool</u> at all times! Remember the temperature of the technical equipment is more important than human comfort. Wear a coat or a sweater, but keep the equipment cool!

1. Turn the selector switch to "OPT. HEAT".
2. The heater will come on and begin heating.
3. When the desired temperature level in the vehicle is reached, move the selector switch to the off position or fan position.

NOTE: Thermostat does not control heater ON/OFF cycle.

Filter Maintenance

The return air filter is located above the removable panel in the air box. Clean the filter by washing the

filter with soap and warm water and letting it dry and then reinstall. Never run the air conditioner without the return air filter in place. This may plug the unit evaporator coil with dirt and may substantially affect the performance of the unit.

For further maintenance procedures refer to the Installation & Operating Instruction Manual.

AIR CONDITIONING SYSTEM
COOLING CYCLE

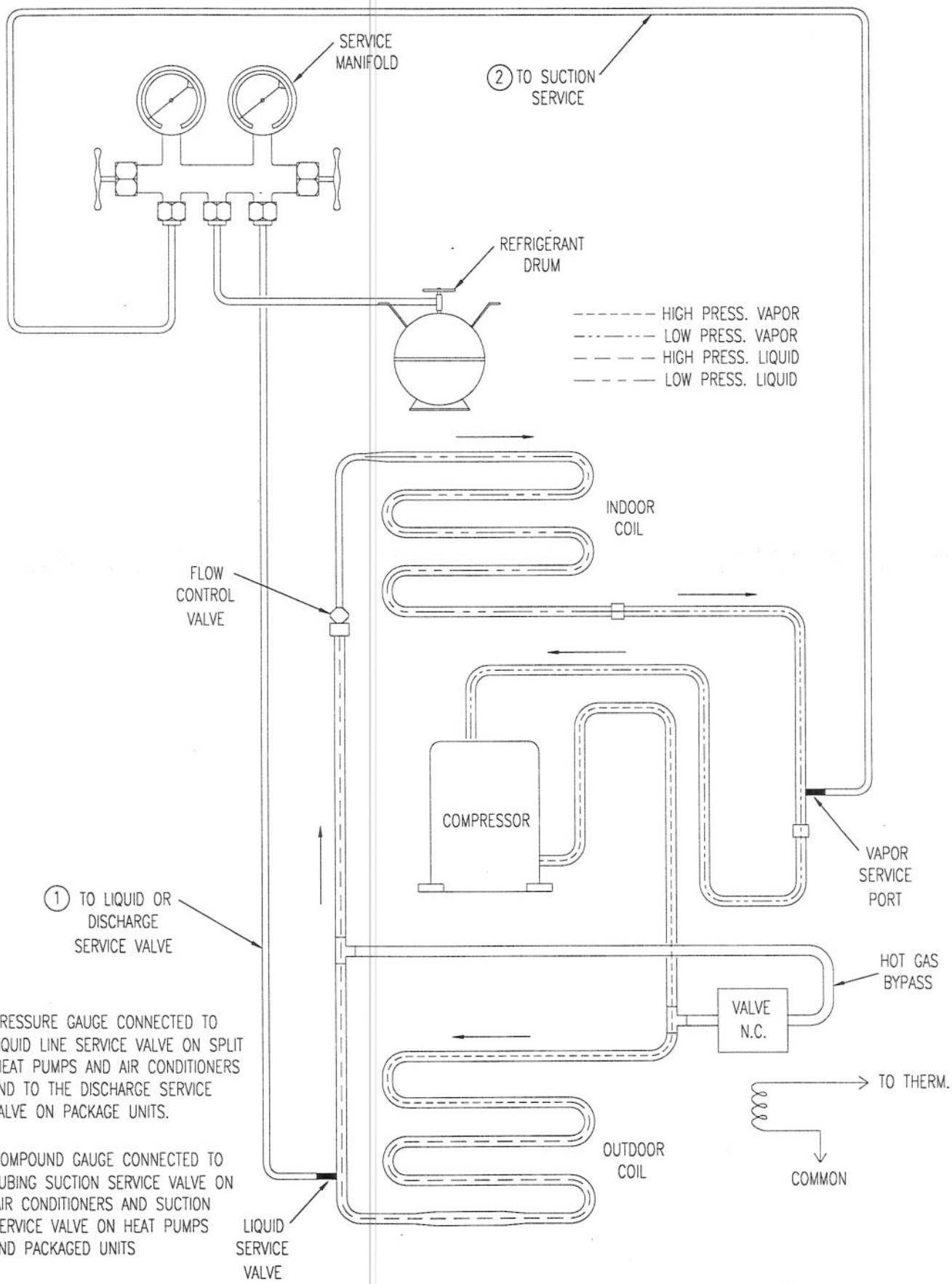

1. PRESSURE GAUGE CONNECTED TO LIQUID LINE SERVICE VALVE ON SPLIT HEAT PUMPS AND AIR CONDITIONERS AND TO THE DISCHARGE SERVICE VALVE ON PACKAGE UNITS.

   COMPOUND GAUGE CONNECTED TO TUBING SUCTION SERVICE VALVE ON AIR CONDITIONERS AND SUCTION SERVICE VALVE ON HEAT PUMPS AND PACKAGED UNITS

HYDRAULIC MAST / PAN & TILT OPERATIONS

The Shook Model A-11 ENG Vehicle is equipped with a 42 ft. (12.80 meter) Will-Burt ENG telescoping mast and pan and tilt. The purpose of this mast is to support the microwave-transmitting antenna at extended heights up to 42 ft. For this reason, the Shook Model A-11 ENG van is able to be quickly set up for transmission of live remote broadcasts from locations miles away from the television studio.

A TMD pneumatic telescoping mast is a series of graduated extruded aluminum tubes that are assembled to nest one inside another. Each tube has a seal at the bottom to contain air pressure and a collar at the top to limit extension of the tube inside it. The mast is extended from its compact nested height by pneumatic pressure supplied by an air compressor located in the bottom of rack #3. The compressor is AC powered from the power breaker panel. The air from this compressor is oiled to lubricate the mast as it is extended. The air is stored in a tank located under the rear of the vehicle.

WARNING: The mast lubrication reservoir must be checked periodically to ensure the mast will raise and retract. The mast seals will be damaged if they are not properly lubricated, and will need to be replaced. Use air tool oil as lubrication. The reservoir is located in the rear storage compartment on the drivers' sidewall.

All the cables that extend to the top of the mast should be contained within an orange coiled cable conduit (nycoil) which neatly encloses all the cables. This nycoil is constructed in such a way as to allow all the cables to extend to the top of the mast when raised, and then collapse into a neat organized pile when the mast is nested.

Mast and Pan Tilt Head Operations

WARNING: Great care must be taken to check above the vehicle to be sure that no obstructions, such as tree limbs or power lines. Any obstructions that exist that could cause damage to the vehicle, the on board equipment, or cause electrical shock and even death to the operator and occupants of the production vehicle.

1. Turn on the air compressor with the AC breaker switch located to the left of rack #1, and allow air pressure to build up in the system. It normally can take from 3 to 5 minutes for the pressure to build up in the storage tank.
2. Check the regulated pressure gage in the rear storage compartment. The gage should be preset at 35 psi, the maximum pressure to be used to raise the mast.
3. Raise the mast by using "Mast Control Switch" located on I/O Panel. Put the switch in the "Raise" (top) position and allow the air pressure to extend the mast in an upward direction to the desired height. When the mast has reached the desired height, move the mast control switch to the "Hold" (center) position.
4. After achieving the desired mast height, orient the transmit antenna in the desired direction for sending the signal back to the studio by pushing the pan tilt direction control in the same direction as you wish the transmit antenna to move. In other words, if you wish the dish to tilt up, push the control in the "up" position. If you wish the antenna to move to the right, push the control to your "right", etc.
5. Contact the receive site by cellular phone or two-way radio and receive permission to power up the microwave transmitter.

   NOTE: In some countries, the laws may be different and require special permission before powering the transmitter! Always use the appropriate legal procedure!

6. While communicating with the studio receive site, orient the transmit antenna for maximum signal reception. This procedure will largely depend upon the microwave system being used, and the laws and operating procedures required in your area.
7. After the remote broadcast has concluded, rotate and tilt the transmit antenna back to the stowed position before lowering the mast or damage to the antenna could result.
8. Lower the mast by placing the "Mast Control Switch" in the "Retract" (bottom) position allowing the air to escape from the system and the mast to nest completely into the production vehicle. Watch the nycoil to be sure that it stacks properly and does not become hooked to a part of the mast and

possibly become damaged in some manner.

9. Turn off the air compressor power switch off.

WARNING: Operating the vehicle while the mast isn't fully retracted is dangerous and can cause damage to the mast, the vehicle, and personnel. Shook has installed a Fuel Pump disable system to reduce the possibility of this from happening. This system has been detailed in the "Mast Safety System" section.

MAST SAFETY SYSTEM

Moving the vehicle while the mast is not fully retracted is dangerous and can cause damage to the equipment, vehicle, and personnel. Shook has installed a fuel pump disable system to reduce the possibility of this from happening. The following page has the wiring diagram for this system.

This system will allow the vehicle to run while the transmission is in "PARK" position, but if it is moved into gear, the engine will shut down. This will allow the vehicle alternator to run and power the DC systems while the vehicle is being used for a production.

If for some reason the vehicle will not operate after the mast has been fully retracted there may be a problem in with the Safety System. To operate the vehicle, go through the following steps.

1. Double-check the mast by elevating it a little and then fully stowing.
2. Check the dash warning light. If it is lit after taking the above steps, there is a problem with the safety system.
3. Located the "Safety System Control Box" under the driver seat.
4. Press the system bypass button, located on the back of the Safety System Control Box. This button overrides the safety system. The vehicle should now operate normally.

   WARNING: **Shook does not recommend using the system bypass button to override the safety system. This removes all safety devices that Shook has installed. If the bypass button is used Shook strongly encourages that the problem be investigated and repaired immediately.**

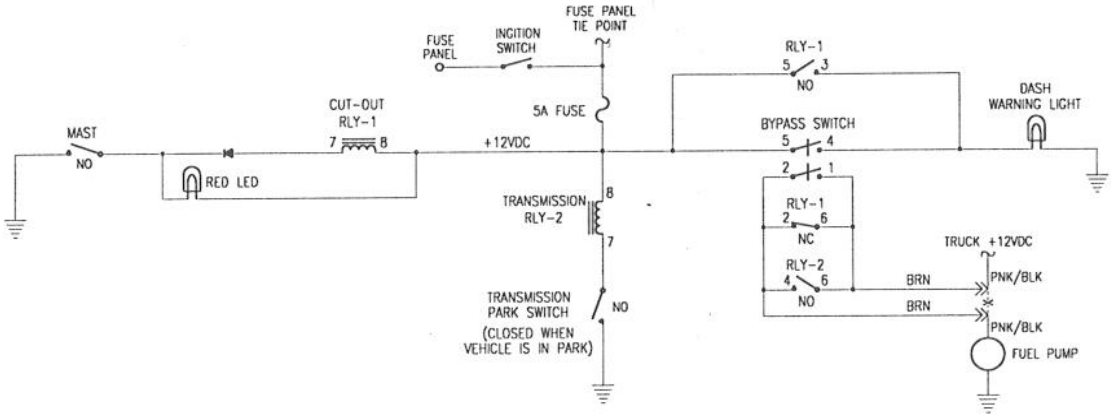

SCHEMATIC

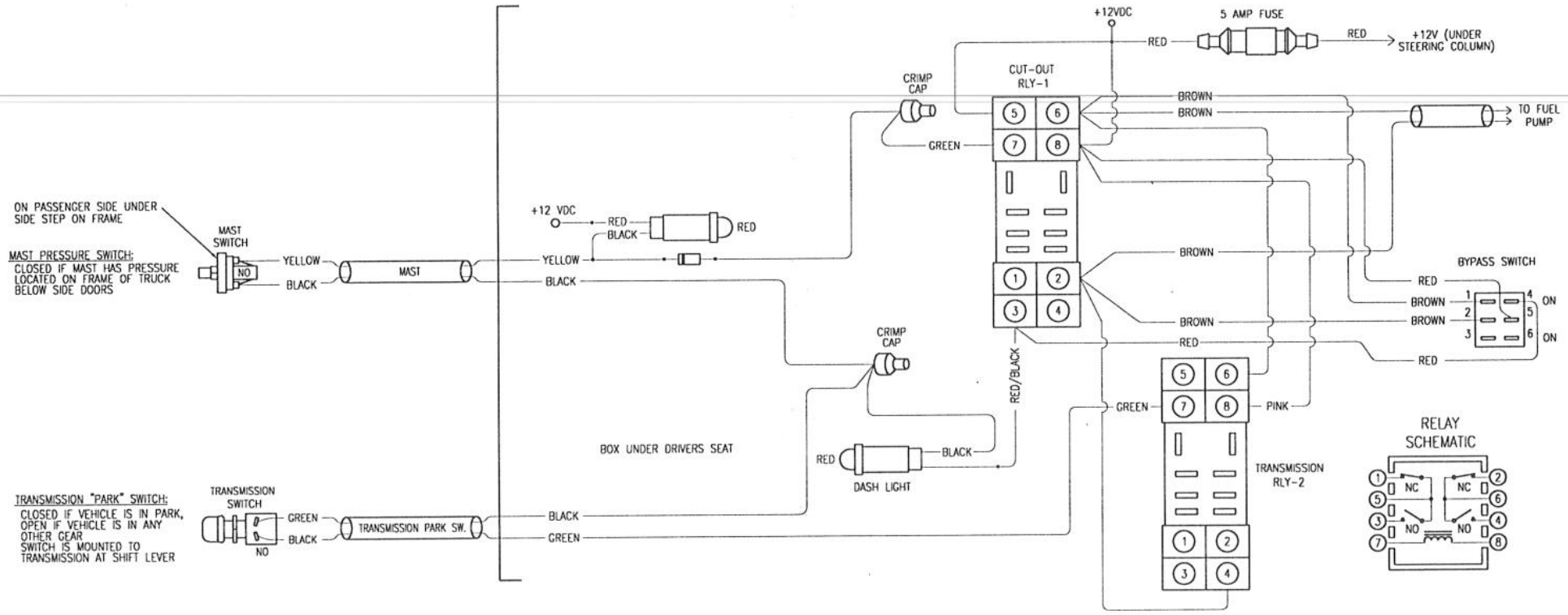

WIRING DIAGRAM

C:\1Jobs\DWGS\773-KABC-TV-1\773-SAFTEY-SYSTEM.dwg 07.25.2000

APPROVED BY:

DATE:

A

THIS DRAWING IS THE PROPERTY OF SHOOK ELECTRONICS USA AND UTILIZES PROPRIETARY DESIGNS. THIS DRAWING CANNOT BE REPRODUCED OR TRANSMITTED WITHOUT WRITTEN CONSENT FROM SHOOK ELECTRONICS USA.

SHOOK Electronics USA, Inc.
18975 Marbach Lane, Bldg 200 (210) 651-5700
San Antonio, Texas 78266 FAX: (210) 651-5220

SHEET TITLE: SAFETY CUTOFF SYSTEM			SHEET NO. 1 OF 1
SCALE: NTS	DATE: 7.25.00	DRAWN BY: RJB	
JOB NUMBER: 773	REVISION DATE:	CHECKED BY:	
FOR: KABC LOS ANGELES, CALIFORNIA		DRAWING NUMBER:	